Rev	ECN NO	Description	Drawing	Approved	Date
X	XXXXXXXXX	XXXXXXXXX	Roger	Lake	2021/11/25

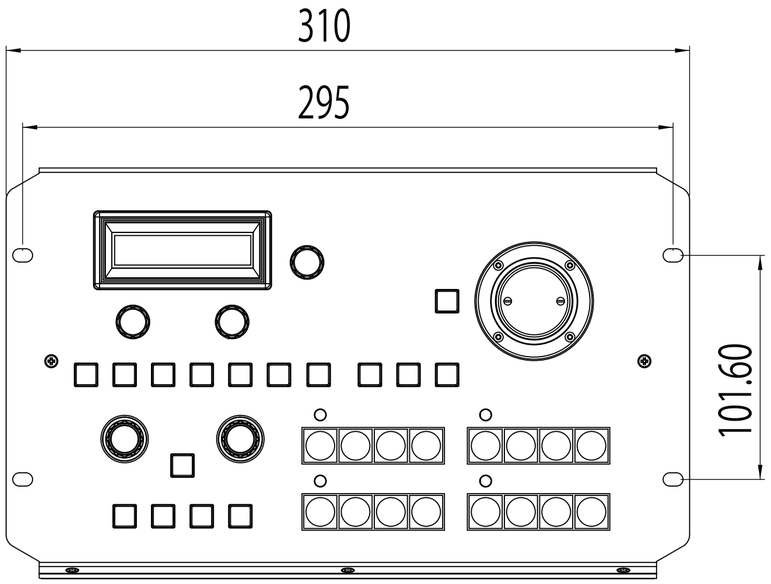

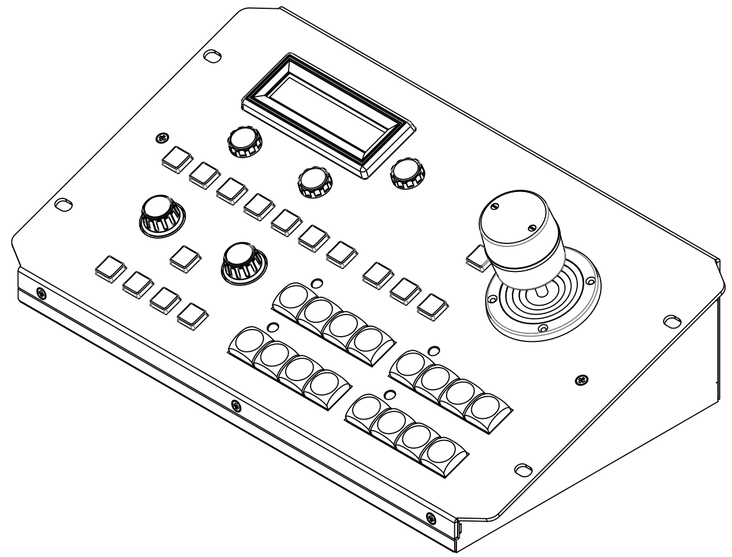

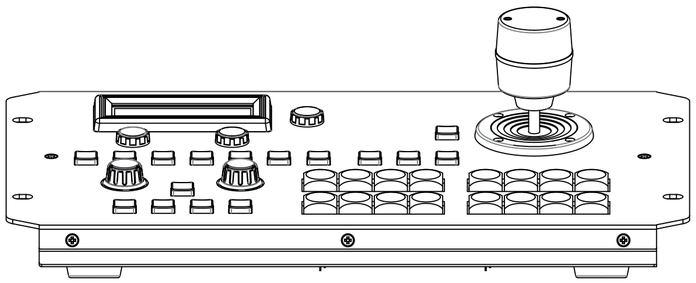

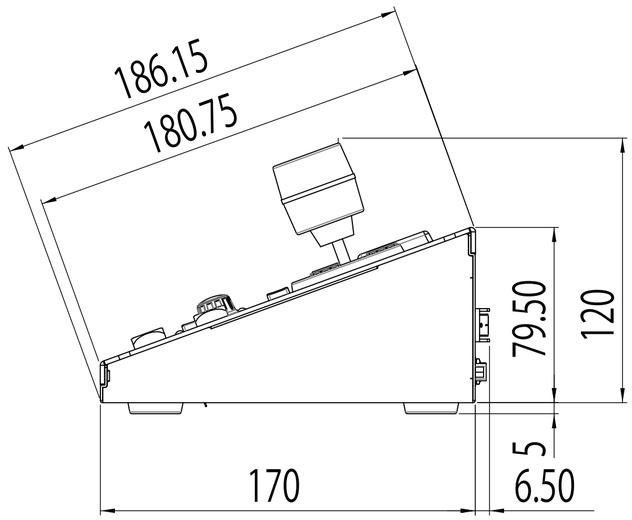

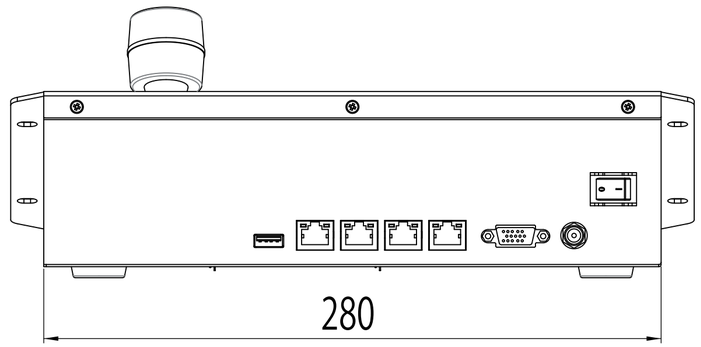

Common Tolerance	
10mm以下	±0.1
10.01~50mm	±0.2
50.01~150mm	±0.3
150.01~300mm	±0.4
300.01mm以上	±0.5

UNLESS OTHERWISE SPECIFIDE DIMENSIONS ARE IN MILLIMETERS

Angles Tolerance: ±0.5 °

Drawing	Design	Check	Approved

Material: XXXXXXX

Finish: XXXXXXX

datavideo

Part Name: RMC-180 MARK2

Part No: XXXXXXX

Model No: XXXXXXX

Unit:	Scale:	Date:	Sheet:
mm	1:2	2021/11/25	1 OF 1