| Rev | ECN NO | Description | Drawing | Approved | Date |
|---|---|---|---|---|---|
| | | | | | 2021/11/25 |

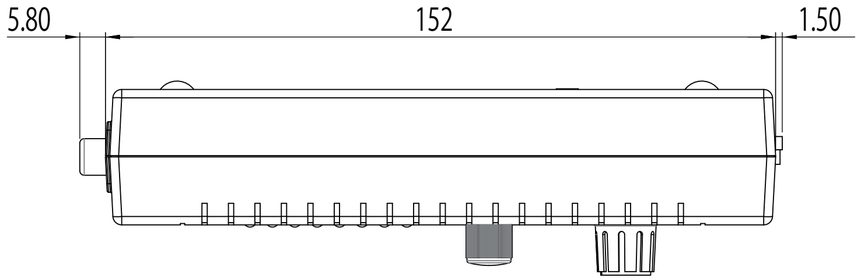


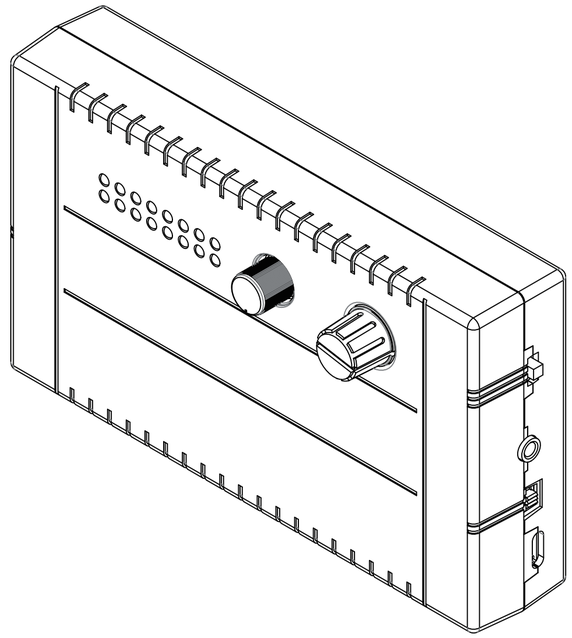

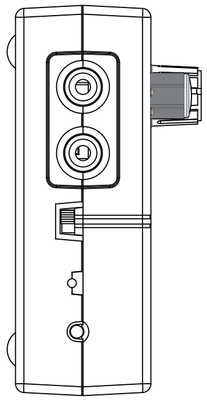

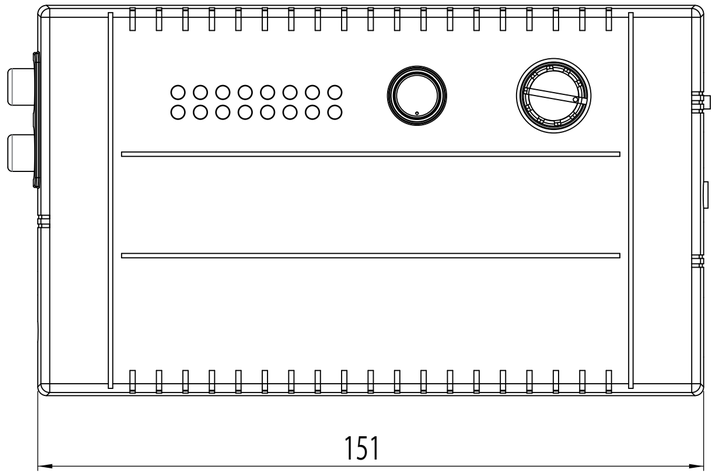


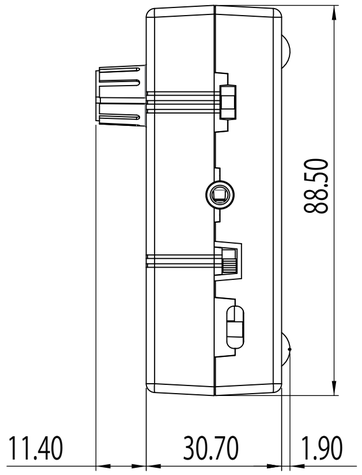


| Common Tolerance | |
|---|---|
| 10mm以下 | ±0.1 |
| 10.01~50mm | ±0.2 |
| 50.01~150mm | ±0.3 |
| 150.01~300mm | ±0.4 |
| 300.01mm以上 | ±0.5 |

UNLESS OTHERWISE SPECIFIDE DIMENSIONS ARE IN MILLIMETERS

Angles Tolerance: ±0.5 °

| Drawing | Design | Check | Approved |
|---|---|---|---|
| | | | |

Material: XXXXXXX

Finish: XXXXXXX

datavideo

Part Name: AD-10

Part No: XXXXXXX

Model No: XXXXXXX

| Unit: | Scale: | Date: | Sheet: |
|---|---|---|---|
| mm | 1:1 | 2021/11/25 | 1 OF 1 |